State Configuration File Explanations

User Manual

2013CB-031-001.A

Table of Contents

1. Revision History

Revision	Date	Name	Comment
A	12-15-2014	Tara Bonner	Created

2. Purpose

This document was created for the CoBi Core Open Knee testing. It illustrates where in the state configuration file matrices and digitized points can be found.

3. Left vs. Right Specimen

The digitized points are all collected in the Optotrak World reference frame. With the left knee, the transformation matrices were mirrored so that they are right knee abstraction.

4. Transformation Definitions

OPT_WORLD	Optotrak World Coordinate System
ROB_WORLD	Robot World Coordinate System
ROB	Robot Position/Orientation Coordinate System
LC	Load Cell Coordinate System

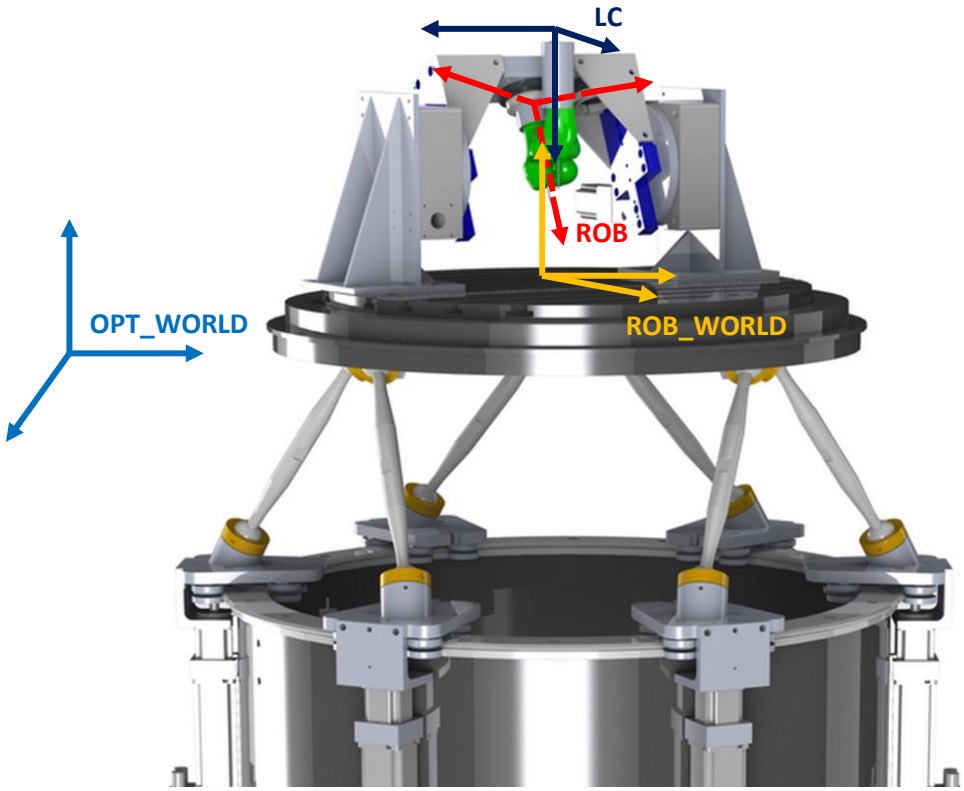

Figure 1: Coordinate Systems for Tibiofemoral testing

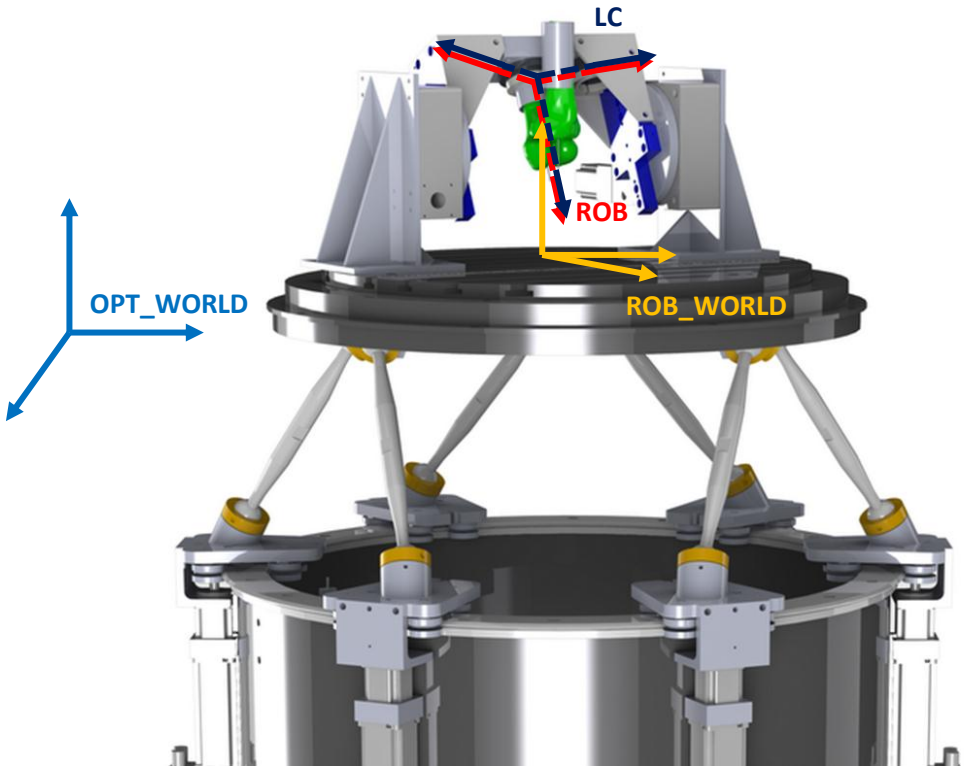

Figure 2: Coordinate Systems for Patellofemoral Testing (Note: During patellofemoral testing, the tibia is mounted to the robot and the femur is mounted to the frame. Also, there are two physical load cells attached to the stage that are not displayed in the image)

TIB_OS	Tibia Optotrak Sensor Coordinate System
TIB	Tibia Coordinate System
FEM_OS	Femur Optotrak Sensor Coordinate System
FEM_ORI	Original Femur Coordinate System
FEM_OPT	Optimized Femur Coordinate System
PAT_OS	Patella Optotrak Sensor Coordinate System
PAT	Patella Coordinate System

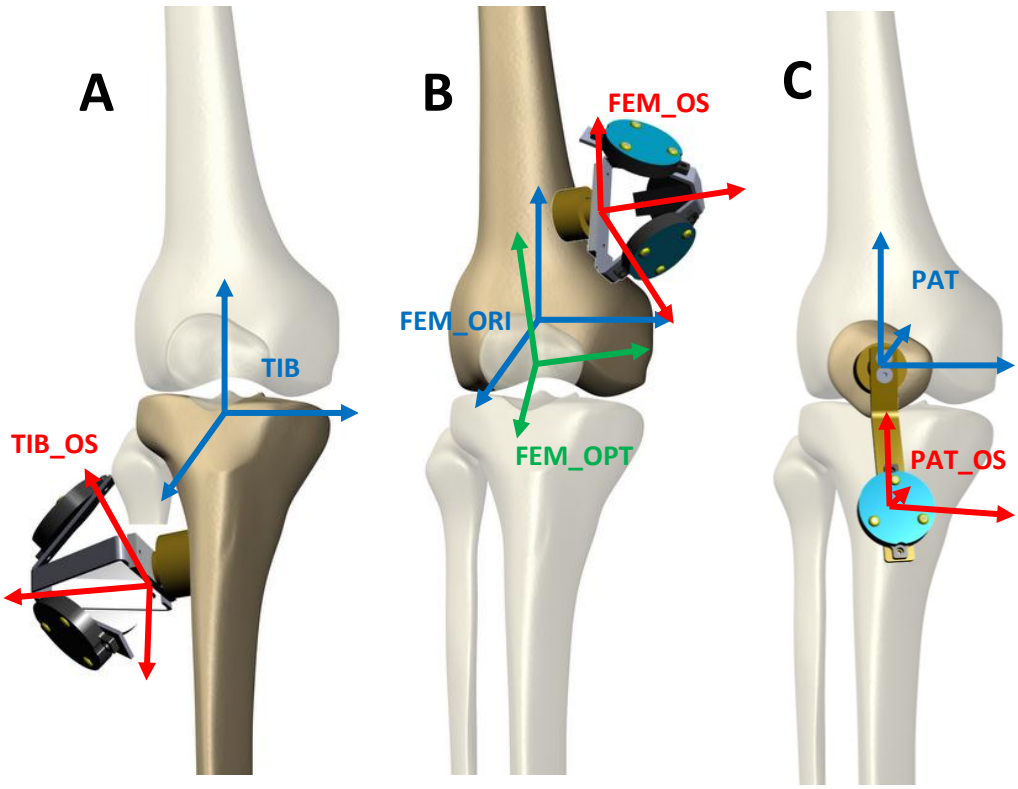

Figure 3: Coordinate Systems for A) tibia, B) femur and C) patella

Example: Transformation matrix from A_CS to B_CS is written as T_A_B. In order to present point P_A (respect to A_CS) with respect to B_CS

$$P_B = T_{A,B}{}^{-1} P_A$$

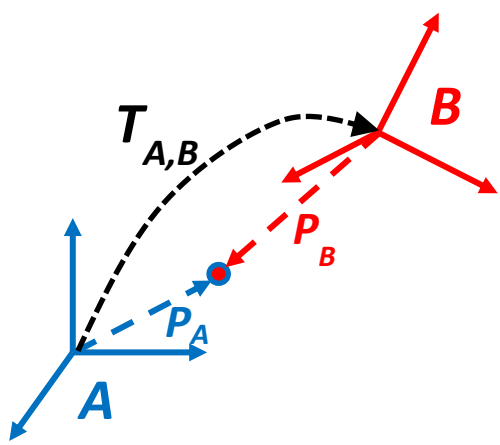

5. Tibiofemoral Testing

- All values are in meters or radians unless described otherwise
- All can be found in the State.cfg file found within to the tibiofemoral testing project.sVprj.zip file

5.1. Transformations

1. **Transformation from TIB_OS to TIB (Fig. 3A)**
    a. [Knee JCS] - T_Sensor2_RB2
2. **Transformation from FEM_OS to FEM_ORI (Fig. 3B)**
    a. [Knee JCS] - T_Sensor1_RB1
3. **Transformation from OPT_WORLD to TIB (Figs. 1 and 3A)**
    a. [JCS] - T_Sensor1_RB1
4. **Transformation from ROB to FEM_ORI (Figs. 1 and 3B)**
    a. [JCS] - Initial T_Sen2_RB2
5. **Transformation from ROB to FEM_OPT (Figs. 1 and 3B)**
    a. [JCS] - T_Sensor2_RB2
6. **Transformation from FEM_OPT to FEM_ORI (Fig. 3B)**
    a. [JCS] - T_FEMnew_FEMold
7. **Transformation from OPT_WORLD to ROB_WORLD (Fig. 1)**
    a. [JCS] - T_World1_World2
8. **Transformation from LC to TIB (Figs. 1 and 3A)**
    a. [JCS Load] - Static Transformation Matrix- T_REF_LOAD
9. **Transformation from OPT_WORLD to LC (Fig. 1)**
    a. [Knee Load Cell Position 2 REF] - T_Sensor1_RB1

5.2. Collected Points

1. **Collected Tibia points w.r.t. Tibia Optotrak Sensor**
    - Not explicitly found in the state file. It can be solved for using the following properties.
    a. [Knee JCS] – Collected Points Rigid Body 2 (m)
        - This is the collected[XYZ] tibia digitized points with respect to the Optotrak world
    b. [Knee JCS] – Collected Points Rigid Body 2 Position Sensor (m,rad)
        - This is the collected Tibia Optotrak Sensor 6-dof position/orientation [XYZRPW]collected simultaneously with the respective Collected Point
    c. [Knee JCS] - Collected Point Names - Rigid Body 2
        - Name/description of anatomical landmarks corresponding with each collected point
2. **Collected Tibia MRI Fiducial Sphere Points w.r.t. Tibia Optotrak Sensor**
    - Not explicitly found in the state file. It can be solved for using the following properties.
    a. [MRI Fiducial Sphere Positions]– Collected Points Rigid Body 2 (m)
        - This is the collected[XYZ] tibia MRI Fiducial Sphere digitized points with respect to the Optotrak world
    b. [MRI Fiducial Sphere Positions]– Collected Points Rigid Body 2 Position Sensor (m,rad)

    - This is the collected Tibia Optotrak Sensor 6-dof position/orientation [XYZRPW]collected simultaneously with the respective Collected Point
  c. [MRI Fiducial Sphere Positions]– Collected Point Names - Rigid Body 2
    - Name/description of the sphere collection number corresponding with each collected point

3. **Collected Femur points w.r.t. Femur Optotrak Sensor**
   - Not explicitly found in the state file. It can be solved for using the following properties.
     a. [Knee JCS] – Collected Points Rigid Body 1 (m)
       - This is the collected[XYZ] femur digitized points with respect to the Optotrak world
     b. [Knee JCS] – Collected Points Rigid Body 1 Position Sensor (m,rad)
       - This is the collected Femur Optotrak Sensor 6-dof position/orientation [XYZRPW]collected simultaneously with the respective Collected Point
     c. [Knee JCS] - Collected Point Names - Rigid Body 1
       - Name/description of anatomical landmarks corresponding with each collected point
4. **Collected Femur MRI Fiducial Sphere Points w.r.t. Femur Optotrak Sensor**
   - Not explicitly found in the state file. It can be solved for using the following properties.
     a. [MRI Fiducial Sphere Positions]– Collected Points Rigid Body 1 (m)
       - This is the collected[XYZ] femur MRI Fiducial Sphere digitized points with respect to the Optotrak world
     b. [MRI Fiducial Sphere Positions]– Collected Points Rigid Body 1 Position Sensor (m,rad)
       - This is the collected Femur Optotrak Sensor 6-dof position/orientation [XYZRPW]collected simultaneously with the respective Collected Point
     c. [MRI Fiducial Sphere Positions]– Collected Point Names - Rigid Body 1
     d. Name/description of the sphere collection number corresponding with each collected point
5. **Collected Patella points w.r.t. Patella Optotrak Sensor**
   - Not explicitly found in the state file. It can be solved for using the following properties.
     a. [Knee PTFJ] – Collected Points Rigid Body 2 (m)
       - This is the collected[XYZ] Patella digitized points with respect to the Optotrak world
     b. [Knee PTFJ] – Collected Points Rigid Body 2 Position Sensor (m,rad)
       - This is the collected Patella Optotrak Sensor 6-dof position/orientation [XYZRPW]collected simultaneously with the respective Collected Point
     c. [Knee PTFJ] - Collected Point Names - Rigid Body 2
       - Name/description of anatomical landmarks corresponding with each collected point
6. **Collected Load Cell Points w.r.t. Optotrak World**
     a. [Knee Load Cell Position 2 REF]– Collected Points Rigid Body 1 (m)
       - This is the collected[XYZ] load cell digitized points with respect to the Optotrak world
     b. [Knee Load Cell Position 2 REF]- Collected Point Names - Rigid Body 1
       - Name/description of load cell collection points

5.3. Offsets

1. **JCS Offsets between Tibia and Optimized Femur calculated at Neutral position**
    a. [JCS] - Position Offset (m,rad)
2. **JCS Offsets between Tibia and Original Femur calculated at Neutral position**
    a. [Knee JCS] - Position Offset (m,rad)

5.4. Other

1. **Estimated Tibia Mass (in Newtons)**
    a. [JCS Load] - Load Cell Mass (N)
2. **Estimated Tibia Center of Mass (in millimeters)**
    a. [Knee JCS] - Center of Mass in Load Cell CS (mm)

6. Patellofemoral Testing

- All values are in meters or radians unless described otherwise
- All can be found in the State.cfg file found within to the patellofemoral testing project.sVprj.zip file unless previous values can be used

6.1. Transformations

1. **Transformation from TIB_OS to TIB (Fig. 3A)**
    a. Same as tibiofemoral
2. **Transformation from Femur FEM_OS to FEM_ORI (Fig. 3B)**
    a. Same as tibiofemoral
3. **Transformation from PAT_OS to PAT (Fig. 3C)**
    a. [Knee PTFJ] - T_Sensor2_RB2
4. **Transformation from ROB to TIB (Figs. 2 and 3A)**
    a. [JCS] - T_Sensor2_RB2
5. **Transformation from OPT_WORLD to FEM_ORI (Figs. 2 and 3B)**
    a. [JCS] - Initial T_W1_RB1
6. **Transformation from OPT_WORLD to FEM_OPT (Figs. 2 and 3B)**
    a. [JCS] - T_Sensor1_RB1
7. **Transformation from FEM_OPT to FEM_ORI (Fig. 3B)**
    a. [JCS] - T_FEMnew_FEMold
8. **Transformation from OPT_WORLD to ROB_WORLD (Fig. 2)**

    a. **[JCS] -** T_World1_World2

9. **Transformation from LC to TIB (Fig. 2 and 3A)**
    a. [JCS Load] - Static Transformation Matrix- T_REF_LOAD
10. **Transformation from ROB to LC (Fig. 2)**
    a. [Knee Load Cell Position 2 REF] - T_Sensor2_RB2

6.2. Collected Points

1. **Collected Tibia points w.r.t. Tibia Optotrak Sensor**
    a. Same as tibiofemoral
2. **Collected Tibia MRI Fiducial Sphere Points w.r.t. Tibia Optotrak Sensor**
    a. Same as tibiofemoral
3. **Collected Femur points w.r.t. Femur Optotrak Sensor**
    a. Same as tibiofemoral
4. **Collected Femur MRI Fiducial Sphere Points w.r.t. Femur Optotrak Sensor**
    a. Same as tibiofemoral
5. **Collected Patella points w.r.t. Patella Optotrak Sensor**
    a. Same as tibiofemoral
6. **Collected Load Cell Points w.r.t. Robot Position**

- Not explicitly found in the state file. It can be solved for using the following properties.
    a. [Knee Load Cell Position 2 REF] – Collected Points Rigid Body 2 (m)
        - This is the collected[XYZ] Load Cell digitized points with respect to the Optotrak world
    b. [Knee Load Cell Position 2 REF] – Collected Points Rigid Body 2 Position Sensor (m,rad)
        - This is the collected 6-dof position/orientation [XYZRPW] of Robot Position collected simultaneously with the respective Collected Point
    c. [Knee Load Cell Position 2 REF] - Collected Point Names - Rigid Body 2
        - Name/description of Load Cell Points

6.3. Offsets

1. **JCS Offsets between Tibia and Optimized Femur calculated at Neutral position**
    a. [JCS] - Position Offset (m,rad)
2. **JCS Offsets between Tibia and Original Femur calculated at Neutral position**
    a. [Knee JCS] - Position Offset (m,rad)
3. **JCS Offsets between Original Femur CS and Patella CS calculated at Neutral position**
    a. [Knee PTFJ]- Position Offset (m,rad)

6.4. Other

1. **Estimated Tibia Mass (in Newtons)**
    a. [JCS Load] - Load Cell Mass (N)
2. **Estimated Tibia Center of Mass (in millimeters)**

a. [Knee JCS] - Center of Mass in Load Cell CS (mm)